# IEEE-488 module C64

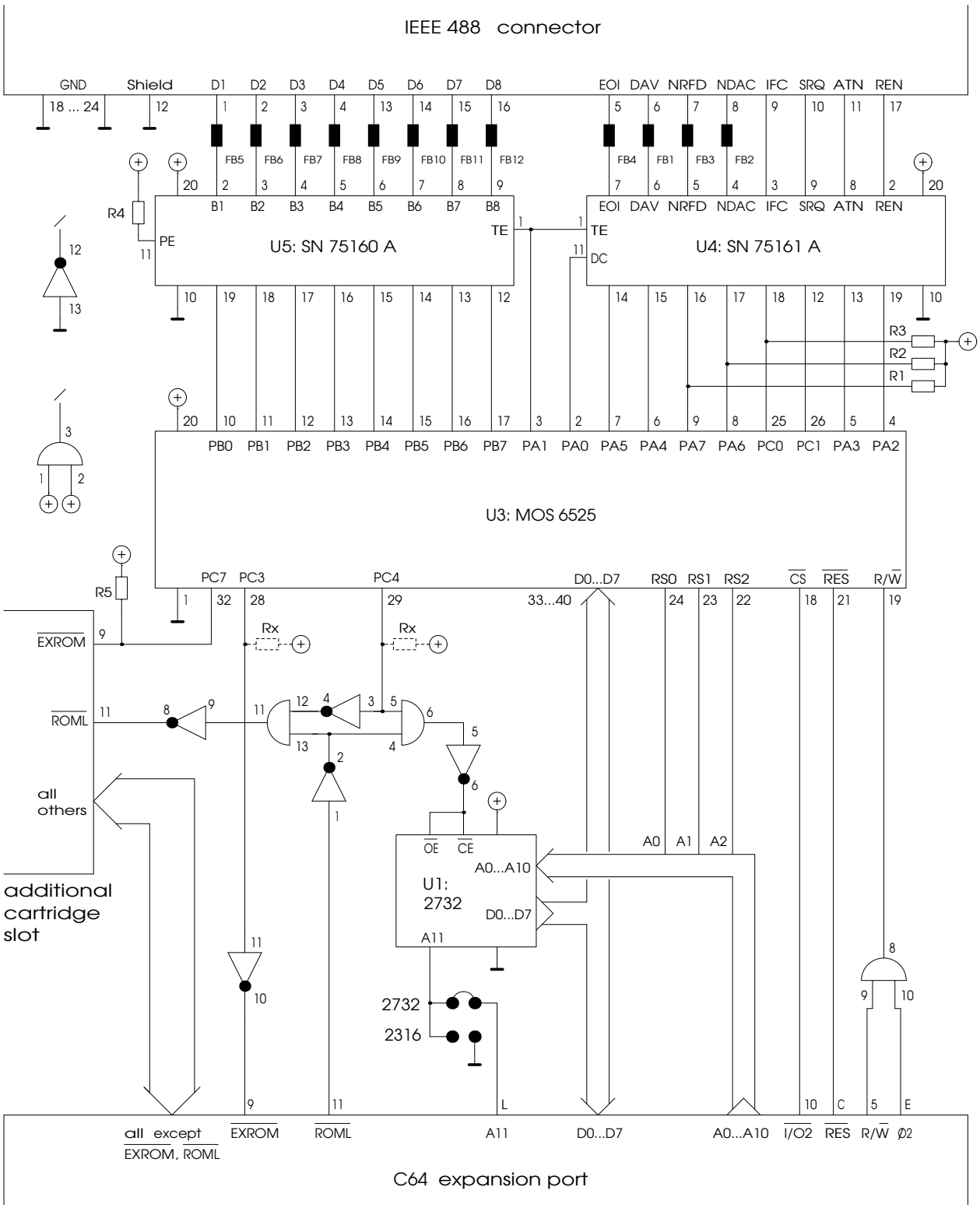


4* = 74LS08

6* = U6: MOS 7713 / 74LS04 (see Text !)

all = 3k3

2* Rx : originally missing (see Text !)

IEEE_C64.PIC (C) 16.7.1999 Woll